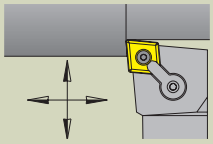

MCLN R/L Toolholder

Style L - Negative 5°
End or Side Cutting
Edge Angle for negative
80° diamond CNM_ inserts

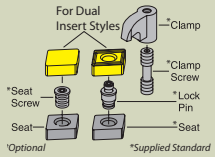

Inch Description	Part No. 733101- R.H.	L.H.	A	B	C	E	F	CNM_ Gage Insert	Seat	Lock Pin	Clamp	Clamp Screw	Optional Seat Screw
MCLNR/L08-3A	50108	50109	0.500	0.500	4.00	1.000	0.750	322	-	NL-33	CL-6	XNS-37	-
MCLNR/L10-3A	50118	50119	0.625	0.625	4.00	1.000	0.875						
MCLNR/L12-3B	50110	50111	0.750	0.750	4.50	1.000	1.000	322	ICSN-332	NL-34L	CL-6	XNS-37	S-34
MCLNR/L16-3C	50112	50113	1.000	1.000	5.00	1.000	1.250						
MCLNR/L10-4B	50116	50117	0.625	0.625	4.50	1.250	1.000	432	ICSN-433	NL-46	CL-20	XNS-48	S-46
MCLNR/L12-4B	50120	50121	0.750	0.750	4.50	1.250	1.000						
MCLNR/L16-4C	50124	50125	1.000	1.000	5.00	1.250	1.250						
MCLNR/L16-4D	50128	50129	1.000	1.000	6.00	1.250	1.250						
MCLNR/L20-4D	50132	50133	1.250	1.250	6.00	1.250	1.500						
MCLNR/L24-4D	50136	50137	1.500	1.500	6.00	1.250	2.000						
MCLNR/L24-4E	50140	50141	1.500	1.500	7.00	1.250	2.000						
MCLNR/L85-4D	50144	50145	1.000	1.250	6.00	1.250	1.250						
MCLNR/L16-5C	50148	50149	1.000	1.000	5.00	1.375	1.250	543	ICSN-533	NL-58	CL-12	XNS-510	S-58
MCLNR/L16-5D	50152	50153	1.000	1.000	6.00	1.375	1.250						
MCLNR/L20-5D	50156	50157	1.250	1.250	6.00	1.375	1.500						
MCLNR/L86-5E	50160	50161	1.000	1.500	7.00	1.375	1.250						
MCLNR/L16-6C	50164	50165	1.000	1.000	5.00	1.500	1.250	643	ICSN-633	NL-68	CL-12	XNS-510	S-68
MCLNR/L16-6D	50168	50169	1.000	1.000	6.00	1.500	1.250						
MCLNR/L20-6D	50172	50173	1.250	1.250	6.00	1.500	1.500						
MCLNR/L20-6E	50174	50175	1.250	1.250	7.00	1.500	1.500						
MCLNR/L24-6D	50176	50177	1.500	1.500	6.00	1.500	2.000						
MCLNR/L24-6E	50180	50181	1.500	1.500	7.00	1.500	2.000						
MCLNR/L85-6D	50184	50185	1.000	1.250	6.00	1.500	1.250						
MCLNR/L86-6E	50188	50189	1.000	1.500	7.00	1.500	1.250						

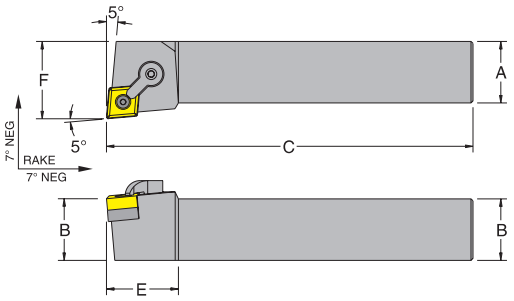

Right Hand Shown, Left Hand Opposite

For inserts see PAGES 16-33. For spare parts see PAGES 112-113.

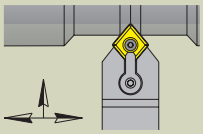

MCMN N Toolholder

Style M - 40° Side
Cutting Edge Angle
for negative 80°
diamond CNM_ inserts

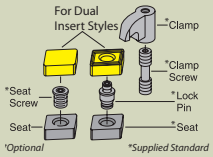

Inch Description	Part No. 733101-	A	B	C	E	CNM_ Gage Insert	Seat	Lock Pin	Clamp	Clamp Screw	Optional Seat Screw
MCMNN12-4B	50198	0.75	0.75	4.50	1.500	432	ICSN-433	NL-46	CL-12	XNS-59	S-46
MCMNN16-4D	50200	1.00	1.00	6.00	1.500	432	ICSN-433	NL-46	CL-12	XNS-510	S-46
MCMNN16-5D	50202	1.00	1.00	6.00	1.750	543	ICSN-533	NL-58	CL-12	XNS-510	S-58
MCMNN20-5D	50204	1.25	1.25	6.00	1.750						
MCMNN16-6D	50206	1.00	1.00	6.00	2.000	643	ICSN-633	NL-68	CL-30	XNS-59	S-68
MCMNN20-6D	50208	1.25	1.25	6.00	2.000	643	ICSN-633	NL-68	CL-30	XNS-510	S-68
MCMNN24-6E	50210	1.50	1.50	7.00	2.000						

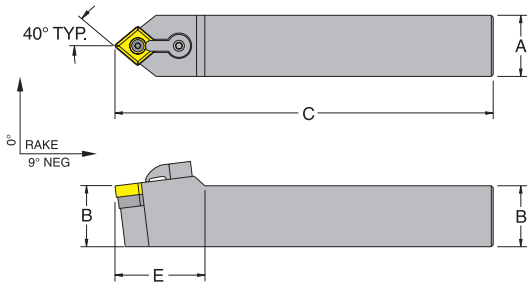

Neutral Hand Shown

For inserts see PAGES 16-33. For spare parts see PAGES 112-113.

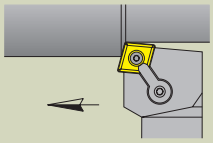

MCRN R/L Toolholder

Style R- 15° Side
Cutting Edge Angle
for negative 80°
diamond CNM_ inserts

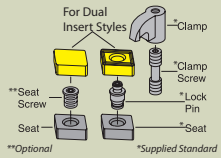

Inch Description	Part No. 733101- R.H.	L.H.	A	B	C	E	F	CNM_ Gage Insert	Seat	Lock Pin	Clamp	Clamp Screw	Optional Seat Screw
MCRNR/L12-3B	50218	50219	0.75	0.75	4.5	0.875	0.800	322	ICSN-332	NL-34L	CL-6	XNS-37	S-34
MCRNR/L12-4B	50220	50221	0.75	0.75	4.5	1.250	0.750	432	ICSN-433	NL-46	CL-9	XNS-58	S-46
MCRNR/L16-4C	50224	50225	1.00	1.00	5.0	1.250	1.250						
MCRNR/L16-4D	50228	50229	1.00	1.00	6.0	1.250	1.250						
MCRNR/L20-4D	50232	50233	1.25	1.25	6.0	1.250	1.500						
MCRNR/L24-4E	50236	50237	1.50	1.50	7.0	1.250	2.000						
MCRNR/L16-5D	50240	50241	1.00	1.00	6.0	1.375	1.250	543	ICSN-533	NL-58	CL-9	XNS-510	S-58
MCRNR/L20-5D	50244	50245	1.25	1.25	6.0	1.375	1.500						
MCRNR/L85-5D	50248	50249	1.00	1.25	6.0	1.375	1.250						
MCRNR/L16-6D	50252	50253	1.00	1.00	6.0	1.500	1.250	643	ICSN-633	NL-68	CL-12	XNS-510	S-68
MCRNR/L20-6D	50256	50257	1.25	1.25	6.0	1.500	1.500						
MCRNR/L24-6E	50260	50261	1.50	1.50	7.0	1.500	2.000						
MCRNR/L86-6E	50264	50265	1.00	1.50	7.0	1.500	1.250						

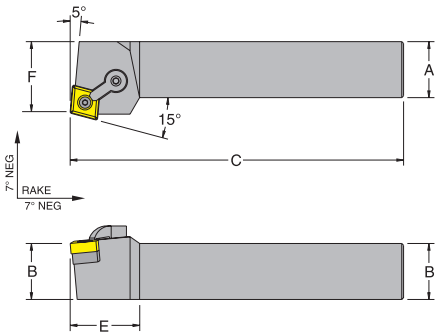

Right Hand Shown, Left Hand Opposite

For inserts see PAGES 16-33. For spare parts see PAGES 112-113.